SpeedFace-V5L Series

Multi-biometrics Verification Terminal
with Temperature and Mask Detection Technology

Fingerprint Recognition | Facial Recognition | Palm Recognition | QR Code | Temperature Detection | Masked Face

Compatible with ZKBio CVAccess

Compatible with ZKBio Zlink

SpeedFace-V5L SpeedFace-V5L[TD] SpeedFace-V5L[TI]

The SpeedFace-V5L Series employs intelligent engineering facial recognition algorithms and cutting-edge computer vision technology. It offers support for fingerprint, facial, and palm verification with large capacity and speedy recognition. Moreover, the SpeedFace-V5L is equipped with QR code support via Mobile APP, further enhancing the device's security performance in all aspects.

SpeedFace-V5L Series uses touchless recognition technology and can identify individuals even when wearing masks, making it a hygienic option. Additionally, it has an advanced anti-spoofing algorithm that can detect fake photos and videos. It also features 3-in-1 palm recognition, which can identify Palm Shape, Palm Print, and Palm Vein in just 0.35 seconds per hand. The palm data is then compared to a maximum of 3,000 palm templates. The facial camera also supports QR codes, Data Matrix, MicroAztec, and other formats, and the ZKBioAccess Mobile Page supports Dynamic QR codes for T&A/A&C.

The TD/TI Version with mask detection helps reduce the spread of germs and help prevent infections straightly. At each access point of any premises and public areas such as hospitals, factories, schools, commercial buildings, and stations during the recent global public health issue with its masked individual identification function during facial and palm verification.

SpeedFace-V5L Series supports video intercom via the mobile app ZSmart and PC software ZKBioTalk. Also, they are integrated with ONVIF Video protocol to connect to ONVIF NVR for Video surveillance and recording. Moreover, it is compatible with ZKBio Zlink Mobile APP & ZKBio Zlink-Web when switching to BEST protocol. It also supports SIP Protocol connection to the indoor unit.

* **NOTE:** Palm recognition function is customized for customers.

Features

- Visible Light Facial Recognition.
- Fingerprint and Palm (Customized) Recognition.
- Specific for dynamic QR code: QR code, PDF417, Data Matrix, MicroPDF417and Aztec.
- Compatible with ZKBioAccess Mobile Page for access control management
- Supports two-way talk and video intercom via ZKBioTalk and ZSmart App through mobile devices.
- ONVIF Protocol.
- Better hygiene with touchless biometric authentication and masked individual identification.
- Anti-spoofing algorithm against print attack (laser, color and B/W photos), videos attack and 3D mask attack.
- Available card modules: 125kHz ID card / 13.56MHz IC card.
- Supplement light with adjustable brightness.
- Multiple Verification Methods: Fingerprint / Face / Palm (Customized) / QR Code / Card / Password.
- Mask detection; facial verification available with masks(Only TD/TI).

- Body temperature detection(Only TD/TI).
- Temperature Measurement Distance: 30 ~ 50cm (1~ 1.64ft) (TD).
- Temperature Measurement Distance: 30cm ~ 120cm (0.98ft~ 3.94ft) (TI).
- Temperature Measurement Accuracy: ±0.3°C (TD).
- Temperature Measurement Accuracy: ±0.3°C (±0.54°F), tested in a distance of 80cm (2.63ft) under 25°C (77° F) environment (TI).
- Temperature Measurement Range: 34 ~ 45°C (93.2 ~ 113°F)(TD).
- Temperature Measurement Range: 20°C ~ 50°C (68°F ~ 122°F)(TI).

* Facial verification for masked individuals will increase FAR. Palm verification for masked individuals is recommended. Temperature measurement data is for reference only, not for medical use.
SpeedFace-V5L[TD]/[TI] is available for indoor enviroments without wind or direct sunlight.

Specifications

Model	SpeedFace-V5L	SpeedFace-V5L[TD]	SpeedFace-V5L[TI]
Display	5"@ ISP Color LCD Screen (720*1280)	5"@ ISP Color LCD Screen (720*1280)	5"@ ISP Color LCD Screen (720*1280)
Camera	WDR Low Light Camera @ 2MP	WDR Low Light Camera @ 2MP	WDR Low Light Camera @ 2MP
Operation System	Linux		
Hardware	CPU: 1.GHz Dual Core RAM: 1GB; ROM: 8GB Supplement Light: Yes Virtual Keypad: 12 Keys Fingerprint Sensor: Z-ID	CPU: 1.GHz Dual Core RAM: 1GB; ROM: 8GB Supplement Light: Yes Virtual Keypad: 12 Keys Fingerprint Sensor: Z-ID	CPU: 1.GHz Dual Core RAM: 1GB; ROM: 8GB Supplement Light: Yes Virtual Keypad: 12 Keys Fingerprint Sensor: Z-ID
Authentication Method	Face / Fingerprint / Palm (Customized) / Card / Password (Virtual Keypad)	Face / Fingerprint / Palm (Customized) / Card / Password (Virtual Keypad)	Face / Fingerprint / Palm (Customized) / Card / Password (Virtual Keypad)
Fingerprint Template Capacity	6,000 (1:N) (Standard) / 10,000 (1:N) (Optional) 6,000 (1:1)	6,000 (1:N) (Standard) / 10,000 (1:N) (Optional) 6,000 (1:1)	6,000 (1:N) (Standard) / 10,000 (1:N) (Optional) 6,000 (1:1)
Face Template Capacity	6,000 (1:N) (Standard) / 10,000 (1:N) (Optional) 6,000 (1:1)	6,000 (1:N) (Standard) / 10,000 (1:N) (Optional) 6,000 (1:1)	6,000 (1:N) (Standard) / 10,000 (1:N) (Optional) 6,000 (1:1)
Palm Template Capacity (Customized)	3,000 (1:N) (Standard) 3,000 (1:1)	3,000 (1:N) (Standard) 3,000 (1:1)	3,000 (1:N) (Standard) 3,000 (1:1)
Card Capacity	10,000 (1:N) (Optional) 10,000 (1:1)	10,000 (1:N) (Optional) 10,000 (1:1)	10,000 (1:N) (Optional) 10,000 (1:1)
Transaction Capacity	200,000 (1:N) (Optional for Capacity Expansion)	200,000 (1:N) (Optional for Capacity Expansion)	200,000 (1:N) (Optional for Capacity Expansion)
Biometric Verification Speed	less than 0.3 sec (Fingerprint) less than 1 sec (Facial Recognition) less than 0.35 Sec (Palm)	less than 0.3 sec (Fingerprint) less than 1 sec (Facial Recognition) less than 0.35 Sec (Palm)	less than 0.3 sec (Fingerprint) less than 1 sec (Facial Recognition) less than 0.35 Sec (Palm)
Touchless Biometric Recognition Distance	1cm to 100cm (Facial Recognition) Up to 50cm(Palm)	1cm to 100cm (Facial Recognition) Up to 50cm(Palm)	1cm to 100cm (Facial Recognition) Up to 50cm(Palm)
False Acceptance Rate (FAR) %	FAR ≤ 0.01% (Visible Light Facial Recognition) FAR ≤ 0.0001% (Fingerprint ; ZKFingerprint V10.0) FAR ≤ 0.05% (ZKPalm V12.0)		
False Rejection Rate (FRR) %	FRR ≤ 0.02% (Visible Light Facial Recognition) FRR ≤ 0.01% (Fingerprint : ZKFingerprint V10.0) FRR ≤ 1.8% (ZKPalm V12.0)		
Biometric Algorithm	ZKFace 3.5 ZKPalm V12.0 (Customized) ZKFingerprint V10.0	ZKFace 3.5 ZKPalm V12.0 (Customized) ZKFingerprint V10.0	ZKFace 3.5 ZKPalm V12.0 (Customized) ZKFingerprint V10.0
Card Type	ID Card@125 kHz (Optional) IC Card@13.56 MHz (Optional) CEPAS(Optional)	ID Card@125 kHz (Optional) IC Card@13.56 MHz (Optional) CEPAS(Optional)	ID Card@125 kHz (Optional) IC Card@13.56 MHz (Optional) CEPAS(Optional)
QR Code	Dynamic or Static QR codes on the ZKBioSecurity mobile application. QR code, PDF417, Data Matrix, MicroPDF417 and Aztec scanning in third-party development projects(Support QR500/600 Series).		
Communication	TCP/IP*1 Wiegand (Input & Output)*1 RS485: ZKTeco RS485*1* Aux Inputs *1, Aux Outputs *1, Electric Lock*1, Door Sensor*1, Exit Button*1, Alarm*1, Doorbell*1,		

Standard Functions	ADMS, T9 Input, DST, 14-digit User ID, Access Levels, Groups, Holidays, Anti-passback, Record Query, Tamper Switch Alarm, Multiple Verification Methods		
Power Supply	DC 12V 3A	DC 12V 3A	DC 12V 3A
Operating Temperature	-10°C to 45°C (14°F to 113°F)	-10°C to 45°C (14°F to 113°F)	-10°C to 45°C (14°F to 113°F)
Operating Humidity	10% to 90% RH (Non-condensing)	10% to 90% RH (Non-condensing)	10% to 90% RH (Non-condensing)
Dimensions	91.93mm * 202.93mm * 21.5mm (L*W*H)	91.93mm * 202.93mm * 21.5mm (L*W*H)	91.93mm * 202.93mm * 21.5mm (L*W*H)
Gross Weight	1.3 Kg	1.3 Kg	1.3 Kg
Net Weight	0.6 Kg	0.6 Kg	0.6 Kg
Supported Software	Software: ZKBio CVAccess / ZKBioTalk Mobile App: ZKBio Zlink / ZSmart Cloud Service: ZKBio Zlink	Software: ZKBio CVAccess / ZKBioTalk Mobile App: ZKBio Zlink / ZSmart Cloud Service: ZKBio Zlink	Software: ZKBio CVAccess / ZKBioTalk Mobile App: ZKBio Zlink / ZSmart Cloud Service: ZKBio Zlink
Installation	Wall-mount (Compatible with Asian Gang-box / Single Gang-Box)	Wall-mount (Compatible with Asian Gang-box / Single Gang-Box)	Wall-mount (Compatible with Asian Gang-box / Single Gang-Box)
Certifications	ISO14001, ISO9001, CE, FCC	ISO14001, ISO9001, CE, FCC	ISO14001, ISO9001, CE, FCC

* Note: RS485 is for RS485 readers.

Configuration

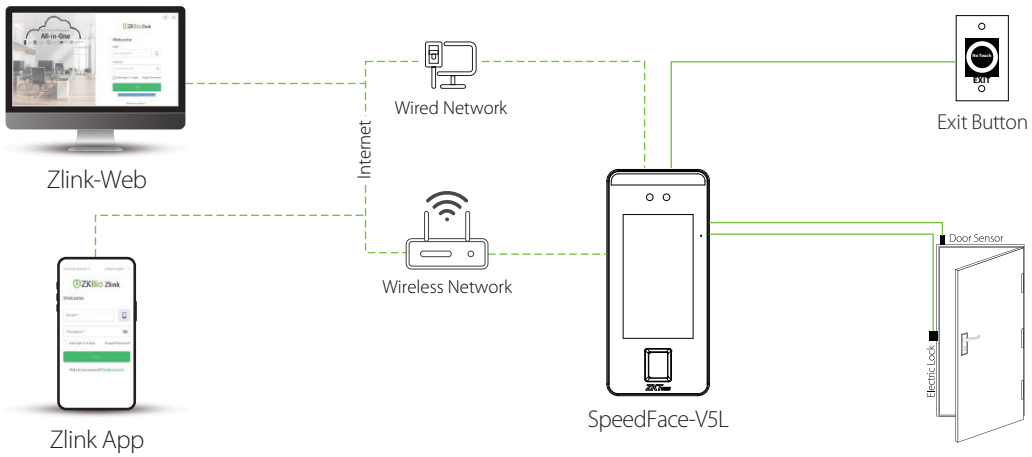

BEST Protocol

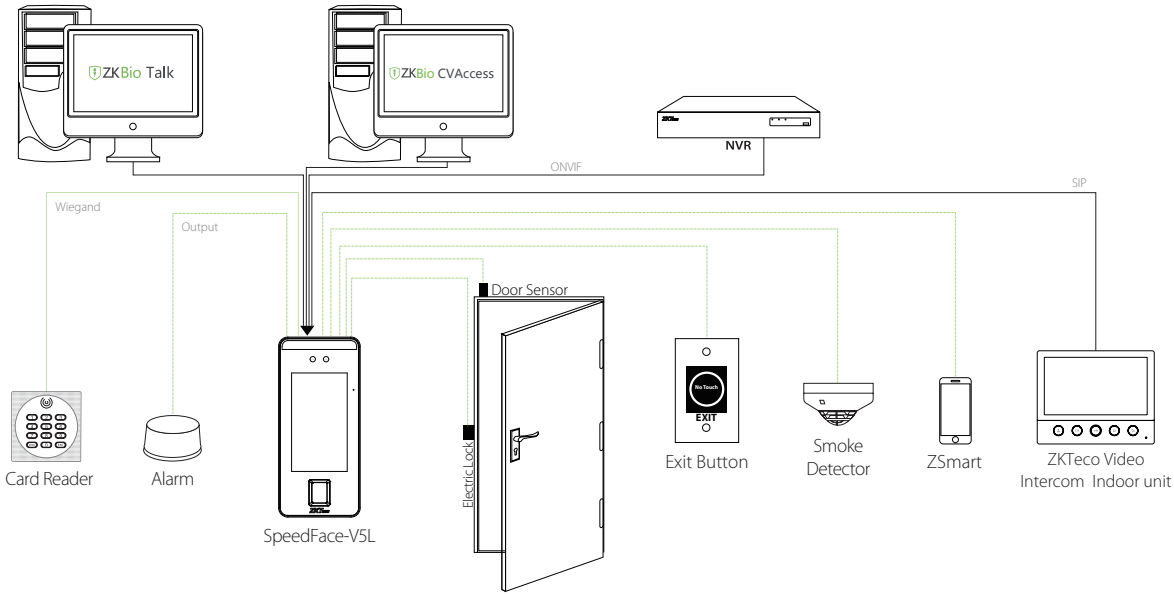

PUSH Protocol

Dimensions (mm)

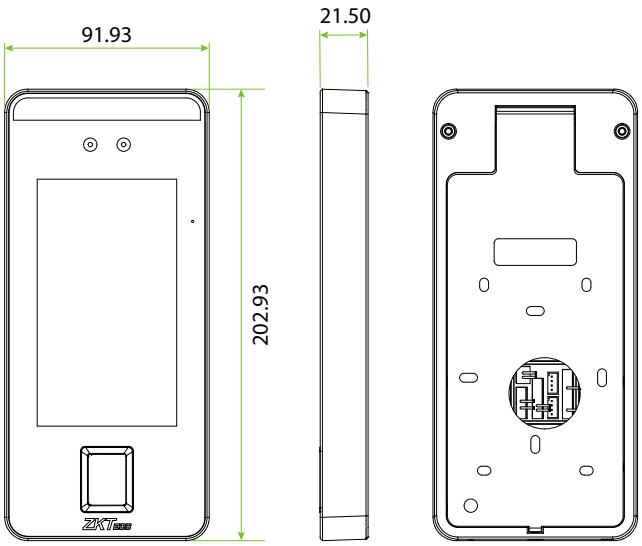

SpeedFace-V5L

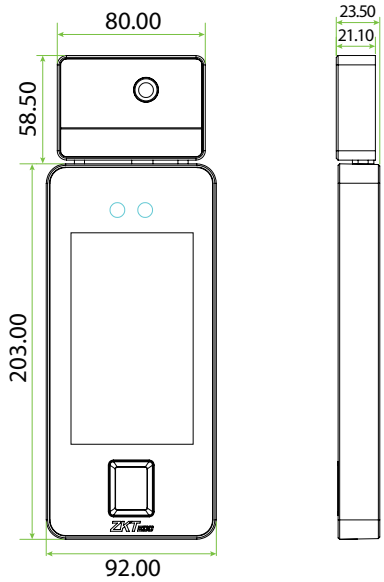

SpeedFace-V5L[TI]

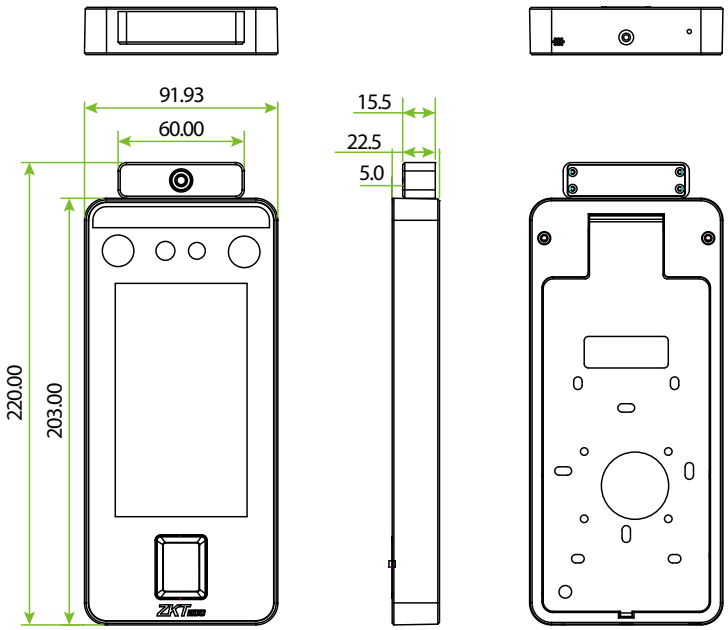

SpeedFace-V5L[TD]

Supported NVR Models

Z8504NER, Z8508NER, Z8516NFR
PoE Version: Z8504NEQ-4P, Z8508NEQ-8P, Z8516NFR-16P, Z8532NFR-16P

Mobile APP: ZSmart(PUSH Protocol), ZKBio Zlink(BEST Protocol)

Copyright © 2026 ZKTECO CO., LTD. All rights reserved.